Rammed-earth walls are built with subsoil that's been excavated from the site. After the topsoil has been cleared away, a foundation is poured, below. Rebar protruding from the foundation will connect the concrete columns, and the ledge will support the forms while the wall is being tamped. At right, a rototiller blends the subsoil with 7% to 15% portland cement. Once the mix is wet, it has about two hours of workability. Facing page: freshly rammed wall sections. The 6-in. gaps between them are for concrete columns. Keyways will lock these columns into the walls. The short wall sections in the foreground will support windows.

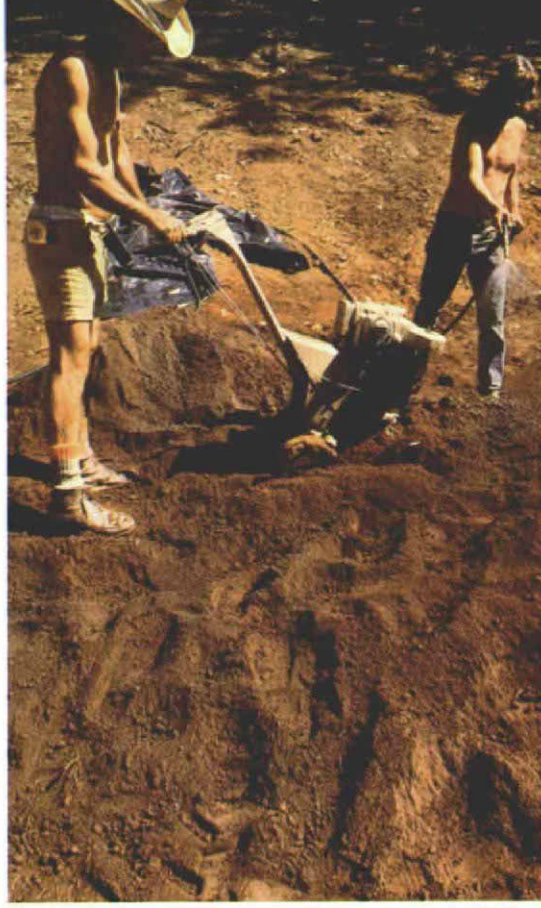

FINE HOMEBUILDING
OCTOBER/NOVEMBER 1982 No. 11

Rammed Earth

An ancient building method made easier by new technology

by Magnus Berglund

David Easton likes the earth. Enough that he hangs his hat on walls made of it. Also on these earthen walls hangs his reputation for building comfortable, good-looking houses. An engineer, Easton is one of a handful of people in this country building with rammed earth.

Rammed-earth walls are made by compacting soil. Using plywood forms, a front-loading tractor, a pneumatic backfill tamper and moistened, cement-laden dirt from the site, Easton can build these rock-hard walls quickly and efficiently. As a member of Easton's crew, I build rammed-earth houses, and I think dirt is a superior building material. I also live in a rammed-earth house, and I've had a chance to see it react to its environment. I know from first-hand experience what it's like to live inside those walls, and I'm more enthusiastic about earth buildings as a result. Easton puts it this way: "Rammed-earth walls are dry, fireproof, rotproof, soundproof and termite-proof. They are comfortable, durable and economical. Rammed-earth houses cost less, use less energy, emit fewer toxins, and will last longer than conventionally built houses of today."

There is nothing new about building with rammed earth. Pliny the Elder refers to it in his *Natural History,* and a 1772 French treatise credits the Romans with introducing rammed-earth construction to England. The Chinese used it in their Great Wall, and the first house erected by Spanish settlers in St. Augustine, Fla., is reputed to have been made of rammed earth. During the 1940s, interest in rammed-earth ran high as prefabricated building materials were diverted to the war effort.

What is new to rammed-earth construction is the use of modern formwork, technique and power tools. A 1938 study by the U.S. Department of Agriculture concluded that three men using shovels, buckets and a hand tamper could complete about 70 sq. ft. of a 14-in. thick wall in one day. Using a tractor, a pneumatic tamper and forms that we designed to assemble and disassemble in a short time, our crew of five has rammed as many as 23 wall units in one day—about 40 tons of dirt. At that rate, we make walls for a 1,000-sq. ft. house in about 16 working hours.

Preparatory work—A typical project starts with site excavation and the pouring of a 15½-in. wide, reinforced-concrete perimeter foundation (photo above left). The foundation is this wide not only because the 14-in. thick earth walls require the extra width, but also because of the tremendous weight the concrete must carry. A ¾-in. by 1½-in. ledge on the top edges of the foundation supports the form panels as the walls go up.

Dirt from the excavation is stockpiled outside the foundation area into separate piles of topsoil and subsoil. We remove roots and large rocks from the subsoil pile, and add water, preparing the mix right on the ground with a rototiller (photo above right). Because of its organic

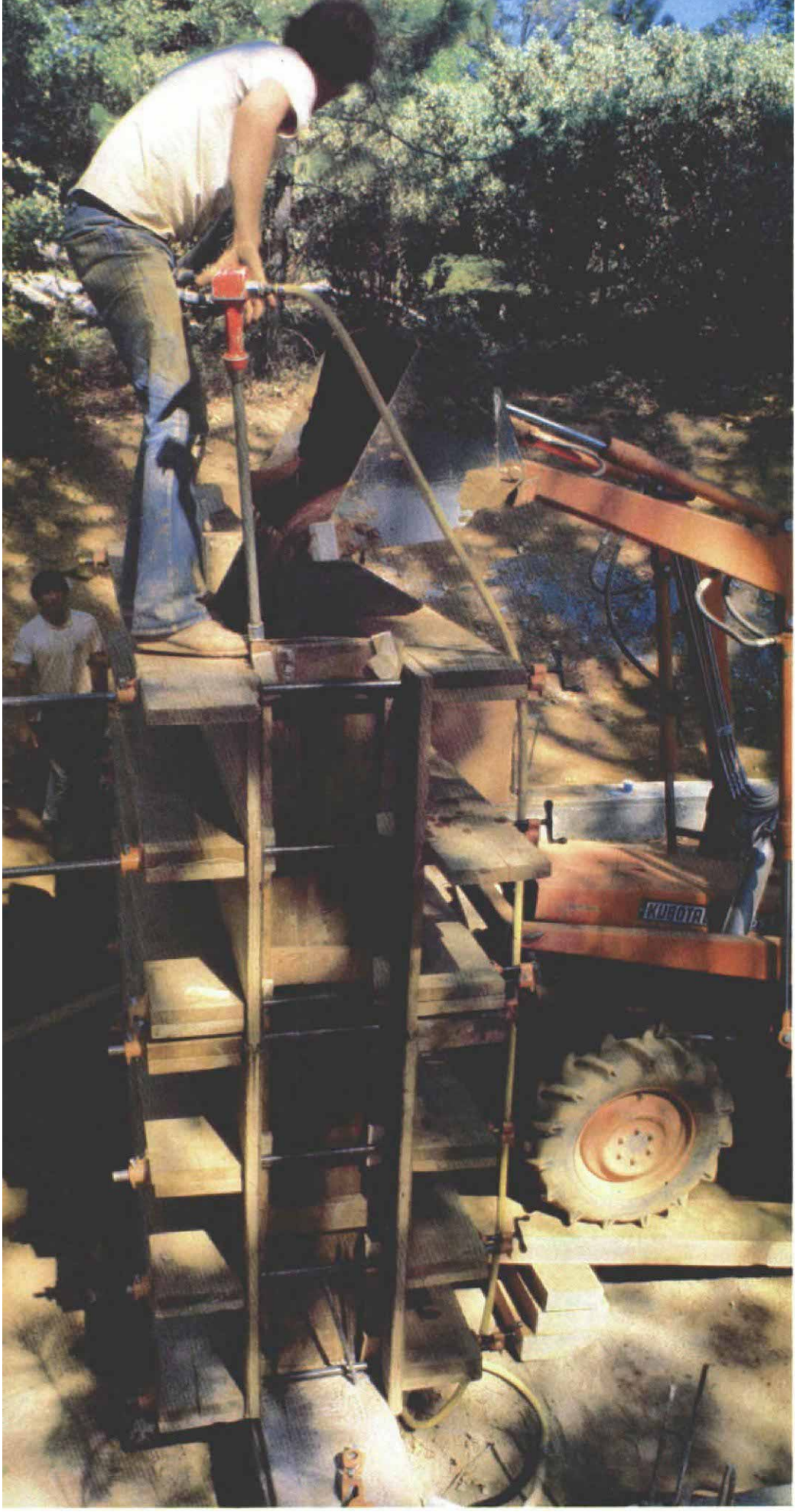

A front-loading tractor on a ramp dumps the rammed-earth mix into the sturdy form, held together by ¾-in. pipe clamps at each end. Wedges between the pipe clamps and the end boards keep the plywood from bowing out during the high-compression ramming. When the form is full, the top of the wall is scraped level before the form is taken down.

content, we don't use topsoil as a building material. At a favorable site, the subsoil needs a quantity of portland cement added to the raw mix as a binder equal to 7% of the compacted volume of the soil. For instance, our average wall unit is 6 ft. long, 7 ft. high and 14 in. wide, and has a volume of about 50 cu. ft. The soil compacts down to about half its volume during ramming, so the average wall section requires 100 cu. ft. of soil mix containing 3½ cu. ft. of cement (7% of 50 cu. ft.) under ideal soil conditions. If the soil is especially sandy or has an abundance of decomposed rock, the amount of cement can go as high as 15%. Not all rammed-earth builders add cement. But Easton believes in its value as a stabilizer to decrease the chance of weather eroding the walls.

Forms—Most historical accounts of rammed-earth construction describe variations on the slip form for building walls. The form is moved around the perimeter of the building, rising in about 2-ft. increments. Our method is different. We build full-height, freestanding boxes, 14 in. wide and from 30 in. to 90 in. long, which correspond to our typical 30-in. rafter spacing. The forms are set up separately for each section of wall and then dismantled as soon as dirt has been rammed to the top. Our crew uses several forms at once; while one is being assembled, a second is being filled and a third is being taken down. This way, the compressor and tractor are always in use.

The forms are built from 1⅛-in. tongue-and-groove plywood panels lined with Masonite and have ¾-in. plywood end-boards (drawing, facing page, left). Holes are drilled in the ends of the panels and pipe clamps are run through them to clamp the 2x10 whalers in place. Each form is squared and plumbed before the ramming begins.

We used to avoid making rammed-earth corners and chose instead to pour concrete columns. But recently we've developed a corner form that's sturdy, yet easily assembled. It relies on opposing pairs of bolted and cross-braced 90° whalers for its strength (photo and drawing, facing page, right).

Soil is dumped into the form box by the front-loading tractor in 6-in. to 8-in. deep increments (photo left) and is pounded down to about half its original volume. If this layer is too thick to begin with, the soil on the bottom won't get properly compacted. Ramming is done with a Thor 33 pneumatic tamper. It has a 5-in. diameter, 33-lb. head. The only real trick to using it is to relax, and listen for the thud, thud, thud that reverberates in the form with a tight, ringing sound, telling you to move on.

As soon as the last course of mix is pounded down, the forms are stripped away, and the wall is finished. No treatment is necessary. If

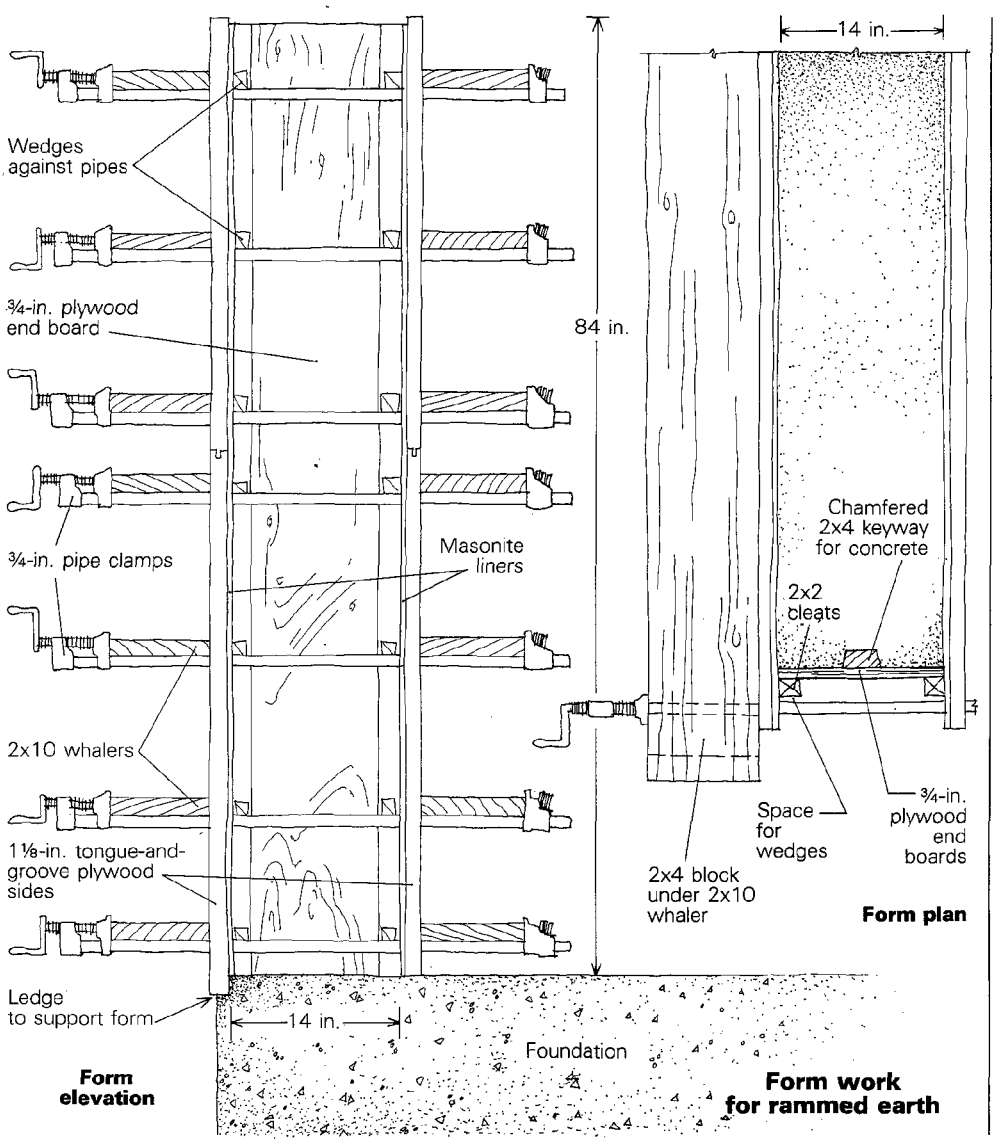

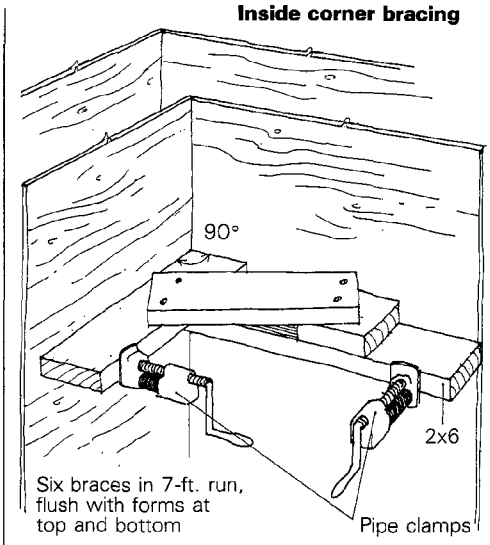

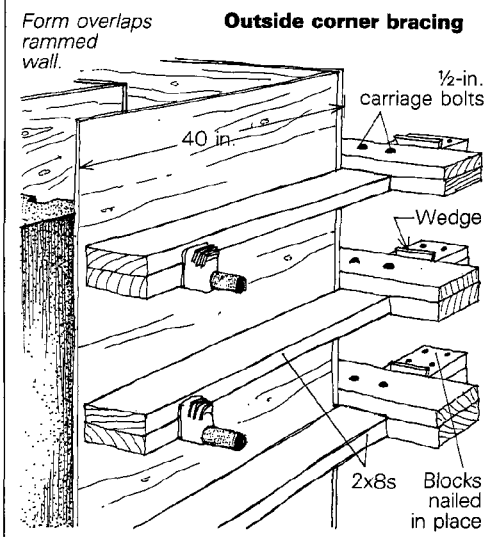

you leave the wall alone, it will be the color of the mined soil, with a hard, textured surface like tempered Masonite.

The walls should be left alone for two weeks while their outer edges harden enough to resist construction wear and tear. Treat them like drying concrete during this period, spraying them lightly from time to time, and sheltering them from the sun with plastic sheeting. Don't let them get wet if there's a danger of a freeze—wet walls that freeze will slough off their smooth surface and require cosmetic plastering. Keep the walls covered when it rains until the roof is raised.

It's pretty hard to do anything so wrong that it will have an adverse effect on the walls' strength, but you do want them to look good so that people who come to see your dirt building will tell their friends how clean it is.

Interior finish—Once cured, rammed-earth walls can be left as they are, or treated any way you like—painted, plastered, drywalled, stuccoed or even wallpapered. Most of our customers prefer the natural look, with nothing more than a clear sealer applied. The sealer prevents dusting and superficial flaking, and provides extra protection from moisture. We have used Thompson's Water Seal, linseed oil, Varathane and Shur Bond. So far, each of these products has worked well, but none of them seems clearly superior.

When a surface finish is needed, Easton prefers dagga, a thin plaster made with two parts fine sand and one part soil from the site sifted through a window screen, plus 8% plastic cement. We add enough water to bring the mix to the consistency of soft ice cream, and then trowel it onto a moistened rammed-earth wall. There's no need for a wire base.

In addition to being a compatible color, the dagga closely matches the coefficient of expansion of the earth wall, lessening the chance that it may crack and flake off when the wall moves with temperature changes. This problem of interface, the point at which materials with different qualities touch, is a serious design consideration in earth houses. The best solution is to limit the number of different materials that go into a house.

Windows and doors trim out easily with standard finish lumber because of the ability of rammed earth to accept and hold galvanized nails. Windows are trimmed in a conventional

A corner form. **Bolted and blocked 2x8 whalers on the outside oppose diagonal 2x6 bracing on the inside (drawing above).**

Illustrations: Frances Boynton

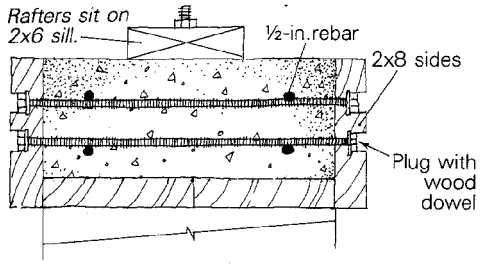

Sill and bond-beam section at window

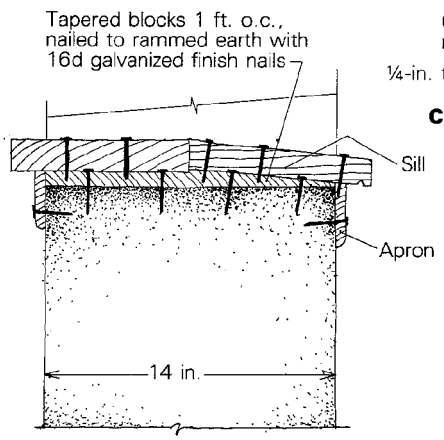

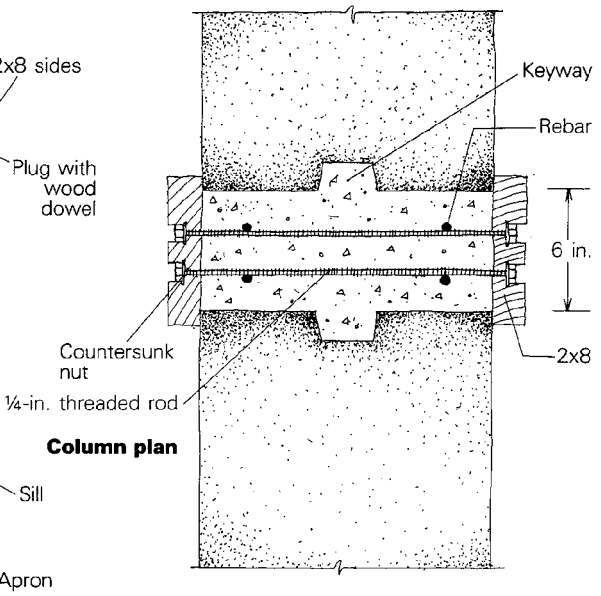

Column plan

The 2x form boards that shape the concrete bond beams and columns stay in place as finish materials. They also provide points of attachment for trim and the ends of sills and thresholds. Where there isn't a handy connection available, wood can be affixed to a rammed-earth wall with 16d galvanized nails, such as the tapered nailers under each window sill and the exterior trim aprons.

manner with a sill nailed over tapered blocks, finished with an apron below, as shown in the drawing at left.

Concrete components—Rammed-earth walls can be built adjacent to one another, but without reinforcing they won't meet the stringent California earthquake-conscious codes. To comply with the demands of our building department, Easton has developed a concrete post-and-beam structure to carry the weight of the oversize roof beams, wide overhangs and sod roof. He erects the wall sections 6 in. apart. A vertical keyway is formed at the end of each section, and four ½-in. rebar studs protrude from the foundation into each gap for a vertical tie to the bond beam. Then the gap between the walls is covered on both sides with 2x8 cedar or redwood. We clamp the boards to the openings between the walls with ¼-in. threaded rod bolted to both sides. Finally, we fill the void with concrete. The boards remain as part of the finish. The ends of the threaded rods are snapped off with a length of ⅜-in. I.D. water pipe. The pipe slips over the end of the rod, and after a few back-and-forth bends the rod snaps off, even with the recessed nut. The hole in the 2x8 is capped with a dowel plug.

Electrical boxes and conduit are attached to the inside face of the 2x8s before the pour. The wiring is then run along the top of the bond beam to junction boxes that feed the post-mounted outlets.

The bond beam resembles a topside perimeter foundation. It joins the wall sections and spans doors and windows. It is formed by more 2x8s, which run horizontally along the top of the walls and are held together with threaded rod and 1x2 spreaders at the top. It's poured at the same time as the columns, and anchor bolts are set in the wet concrete for a 2x6 sill plate that will connect the rafters to the walls.

With the sod roof, the rafters on our houses carry loads of up to 100 lb. per sq. ft. This calls for some big beams. Our favorites are local pines and firs that we mill ourselves. These are usually left exposed on the interior. The roof deck is then built up with a hot-mop process or a vinyl swimming-pool liner to receive a load of topsoil and rolls of sod. Overhangs are usually about 3 ft., to provide shade and to protect the walls from rains.

Soil test—When someone comes to David Easton to ask about building a rammed-earth home, one of the first questions is, "Will my soil work?" Easton's answer is that he can usually make it work if it's not composed entirely of solid rock. Even though the ideal soil for rammed earth is a mix of 30% clay and 70% sand, we've found that a 25% to 40% clay constituent will still make a good wall. If the soil

Columns and bond beams are filled with pumper-delivered concrete. Quarter-inch threaded rod holds the form and finish boards together during the pour. After the concrete sets up, the threaded rod will be recessed into the 2x8s and plugged with dowels. The concrete end columns in this house required forms with extensive diagonal bracing.

has too much clay, we bring in some sand. If there's too much sand or decomposed rock in the soil, we add more portland cement.

To test for your sand-to-clay ratio, fill a quart jar halfway with your subsoil and top it off with water. Shake it up well and let it settle overnight. This doesn't make you a soils engineer but you should be able to see the layer of sand on the bottom, the clay next and the lighter organic materials on top.

You can do a quick field test for the moisture content of your mix. Ball some dirt up in your hand and squeeze it tight. If it sticks together, drop it from a height of 5 ft. onto a hard surface. If it breaks into loose dirt, it's ready to be made into a house. If it doesn't, it's too wet.

If you want to take on a rammed-earth project, my advice is to jump in and give it a try. You'll learn more by tamping your soil for a day than you will from a month of reading about it. Make a small practice wall right on the ground. If you get cracks in the walls, you've used too much clay, so add some sand. If the corners crumble when you brush against them lightly, you've mixed in too much sand; add some clay or cement. If the walls are honeycombed, marked by loose areas that fall out along compaction lines, then the mix is too dry or you tried to ram too much at a time.

Inside the house—Easton doesn't see any reason to install conventional heating and cooling in his rammed-earth houses. Orienting the house to take full advantage of sun and shade, along with lots of south-side glazing, is always a design priority. The 14-in. thick walls function like 12-hour thermal clocks; it takes half of the day/night cycle to transfer heat through the rock-hard thicknesses, making rammed-earth houses especially well suited to climates marked by wide temperature swings.

Under the patterned floor slabs, each house includes a passive-solar convection loop of 12-in. sub-grade culvert connecting the cool, north interior wall to a south-side greenhouse. The sod roof also contributes to passive cooling by insulating the house, and by acting as an evaporative cooler in the summer. The result is a temperate home which, rather than sealing off its occupants inside a vapor barrier, circulates fresh air and controls inside temperatures without the use of mechanical systems.

The ten houses built so far by David Easton's Rammed Earth Works retain much of the flavor of the traditional California adobe, while their exposed rafter ends, wide eaves and natural wood interiors recall the Craftsman style (photos at right). With their earthen walls rising from the same soil, topped by native sod, each one looks as if it just grew there. □

Magnus Berglund lives in Wilseyville, Calif.

Site-cut pines and firs are transformed into rafters, beams, cabinets and countertops in Easton's rammed-earth houses, above. These earthen walls are finished with a coat of dagga, a thin plaster made with local soil. Right, a sod roof keeps this 1,300 sq. ft. house cool on summer afternoons while ridge-mounted sprinklers water the grass.