Add Storage to

A long cabinet with traditional joinery and improvised details replaces a traditional stairwell railing

BY SCOTT GIBSON

My friend Kevin took a long look at the makeshift railing at the top of the stairs and hesitated only slightly before asking, "Have you thought about turning that into a bookcase?" It was not so much a question but rather a suggestion I recognized immediately as requiring a ton of extra work. But it was also too good to ignore. My wife's home office is right next to the stairwell, and by substituting a bookcase for a traditional balustrade, I could provide lots of storage for books and office supplies.

I sketched some ideas until I arrived at one I liked. Facing my wife's work area, the cabinet would have two sections of open shelves for books flanked by cabinets concealed with doors. A frame-and-panel back would face the stairs. To save a few inches of floor space, the case would overhang the stairwell, resting on a ledger and a series of brackets.

The bookcase gives us 18 running ft. of shelf space, plus two cabinets nearly 2 ft. wide, while taking up about 6½ sq. ft. of floor space.

Make a long built-in manageable

The bookcase is only 1 ft. deep, but it's 10 ft. long. That posed some problems. I couldn't assemble and finish the project in place, and in my small shop, it wasn't practical to build the case as a single unit. So I divided it into two 5-ft.-long plywood boxes joined in the middle. Face frames on the front and back of the case, along with an MDF beadboard back, span the seam and give the case structural rigidity (drawings pp. 66-67). The plywood cases are

FURNITURE-GRADE DETAILS FROM ALL ANGLES

Instead of a traditional railing, the author chose to enclose the open side of an office stairwell with a long bookcase. At 36 in. high, it meets code requirements, increases the room's storage capacity, and adds a new level of style. Cantilevered over the stairs, the bookcase occupies little floor space. A ledger and corbels provide decorative support.

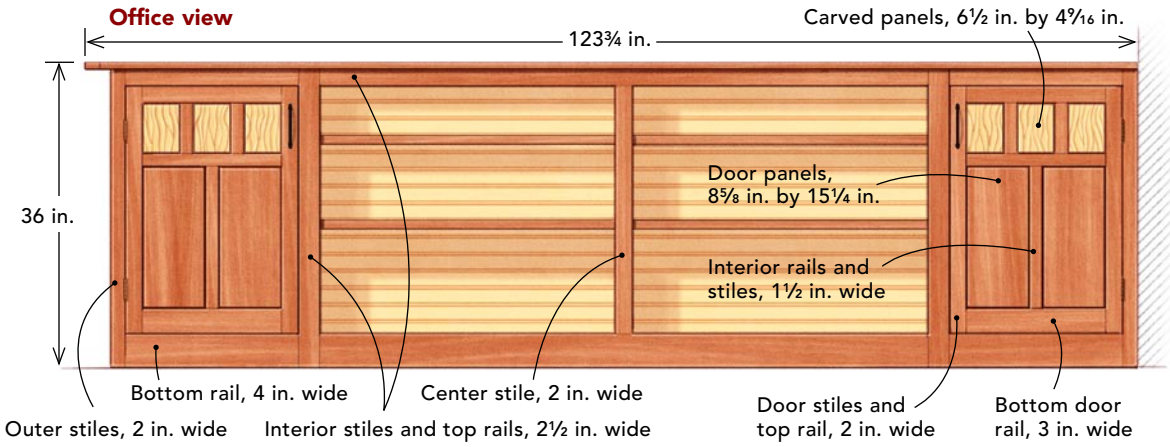

Drawings: John Hartman

Your Stair Rail

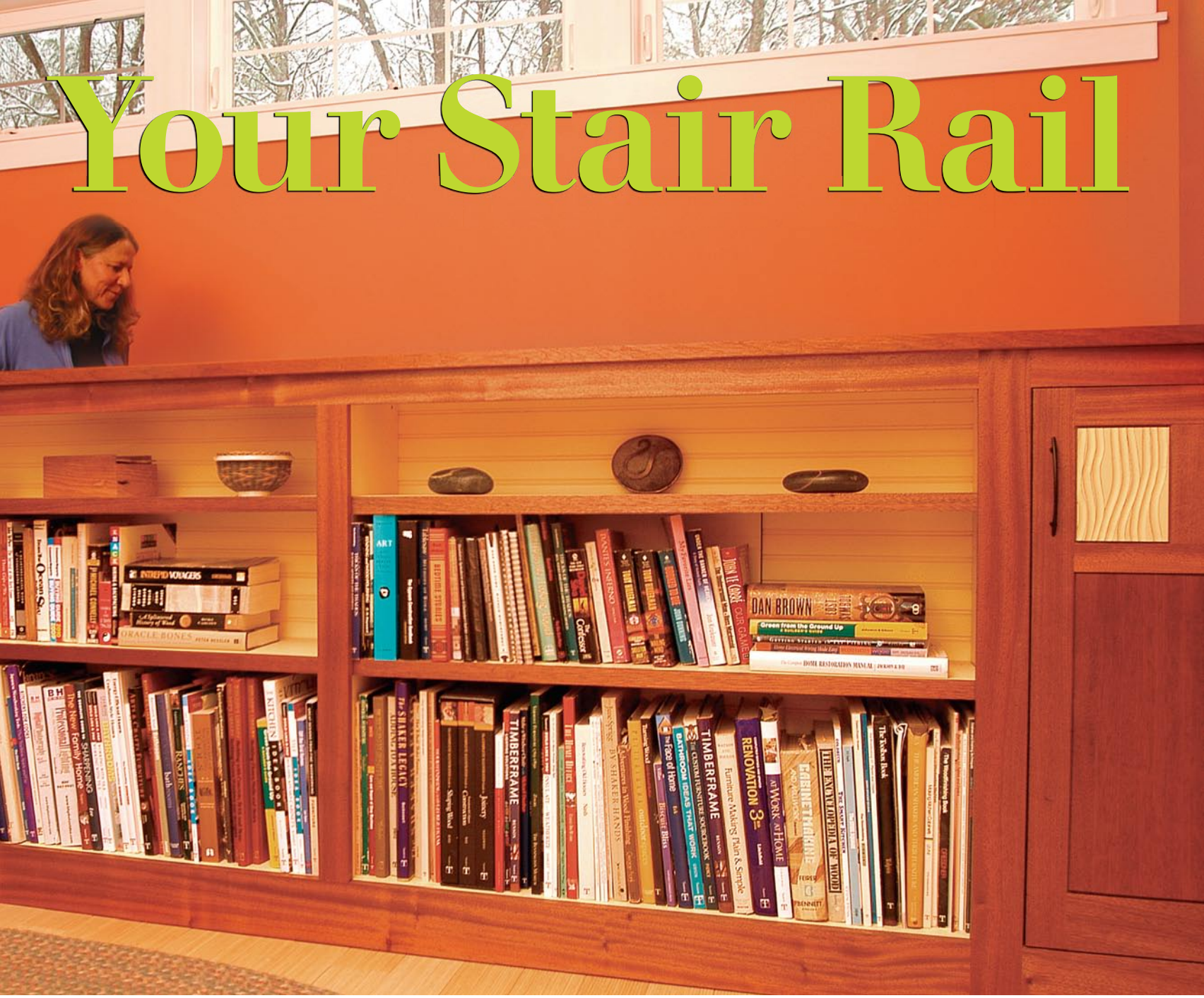

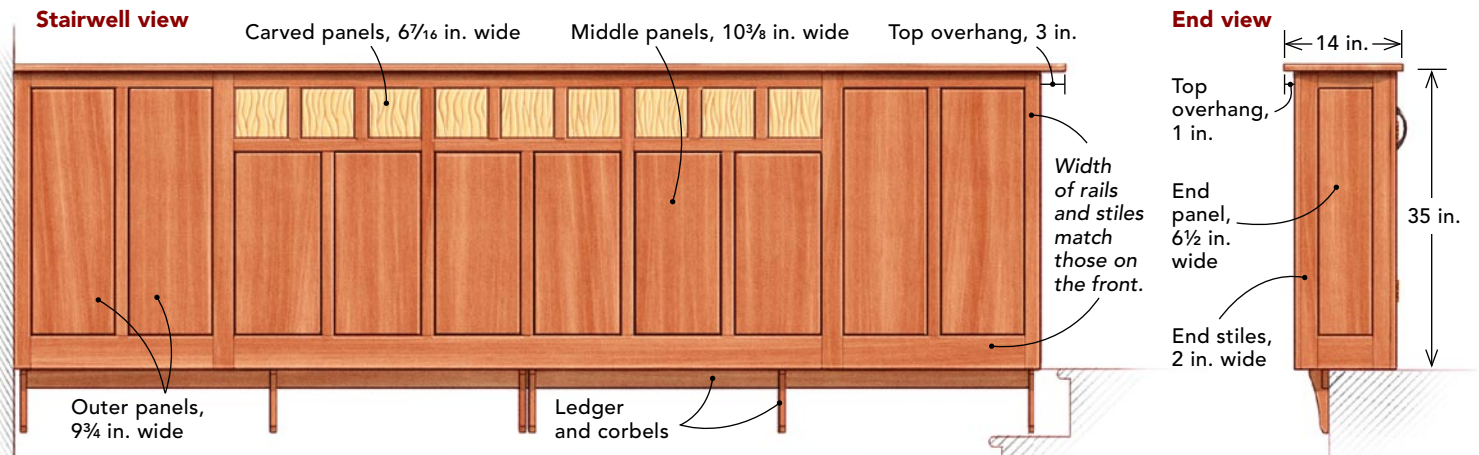

FACE FRAMES TIE THE UNIT TOGETHER

Because of its 10-ft. length, the carcase was made from two 5-ft.-long halves joined at the center (1). The parts were assembled with screws, biscuits, and glue. The top stretchers were let into the sides for strength. Next, the three-piece beadboard back was attached (2), followed by front and back face frames, which were glued and clamped to the carcase (3-6). Any potential weakness where the two case halves are joined is compensated for by the overlay of the face frames.

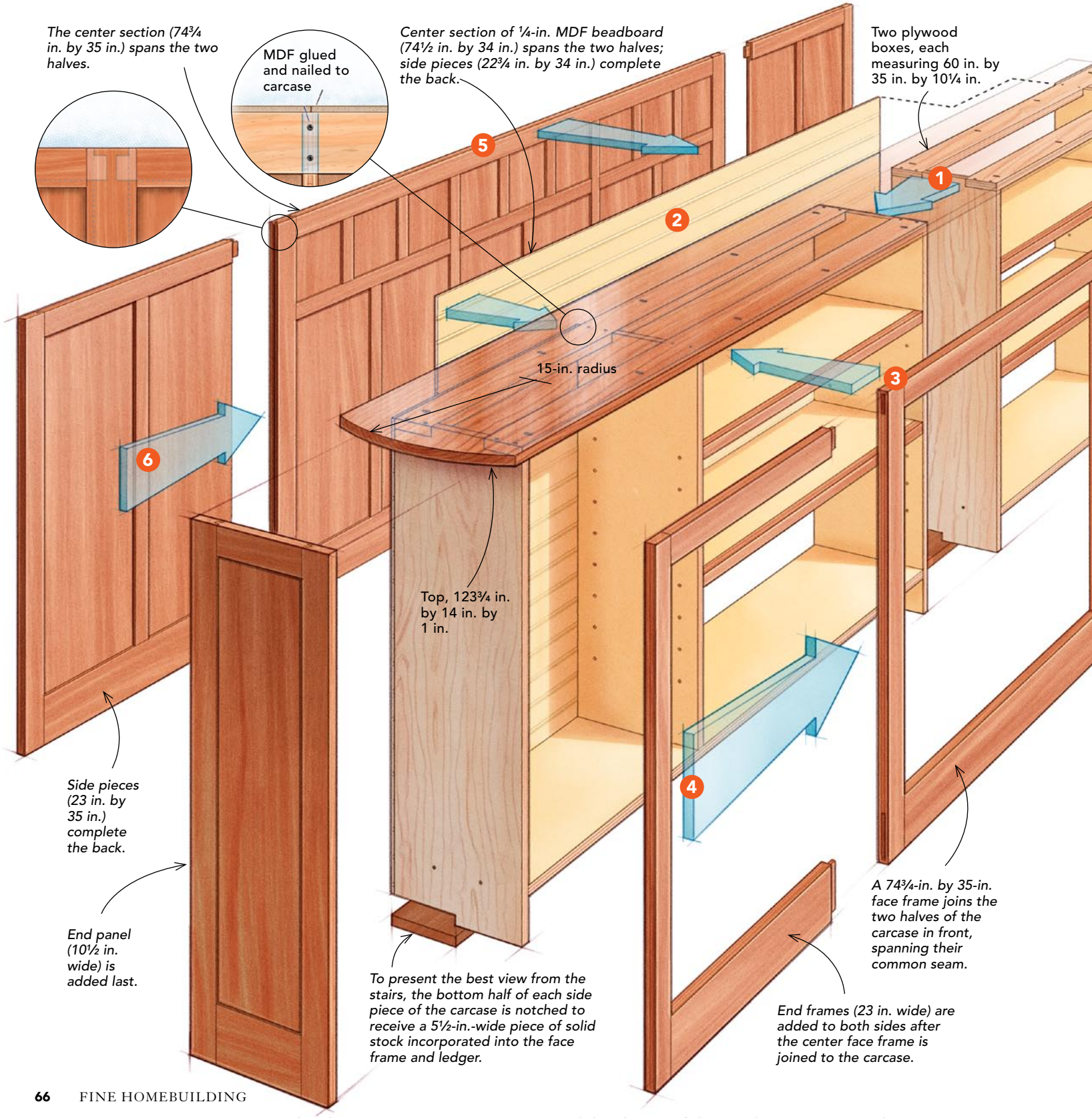

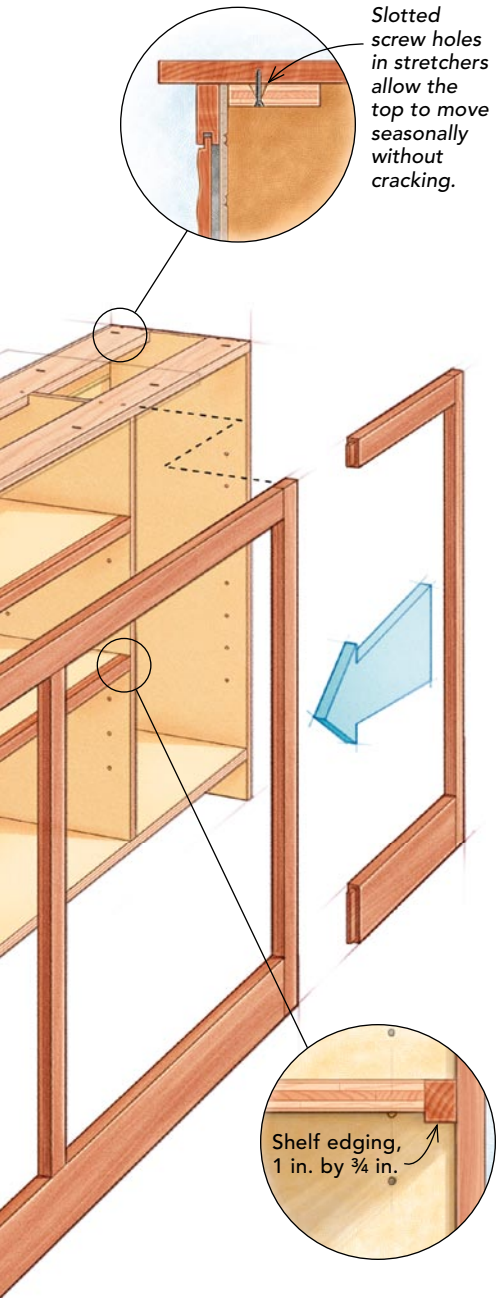

Traditional joinery, with a whimsical variation

Mortise-and-tenon joints were used on the face frames and doors. The tenons were cut on a tablesaw, and the mortises were quickly excavated with a benchtop mortiser (above). The haunched tenon adds strength and fills the exposed slot cut for panels.

The decorative panels were first cut, then secured between two stops. A router fitted with a ½-in. core-box bit was used to freehand the designs (below). The panels were given two coats of paint before they were incorporated into the frames.

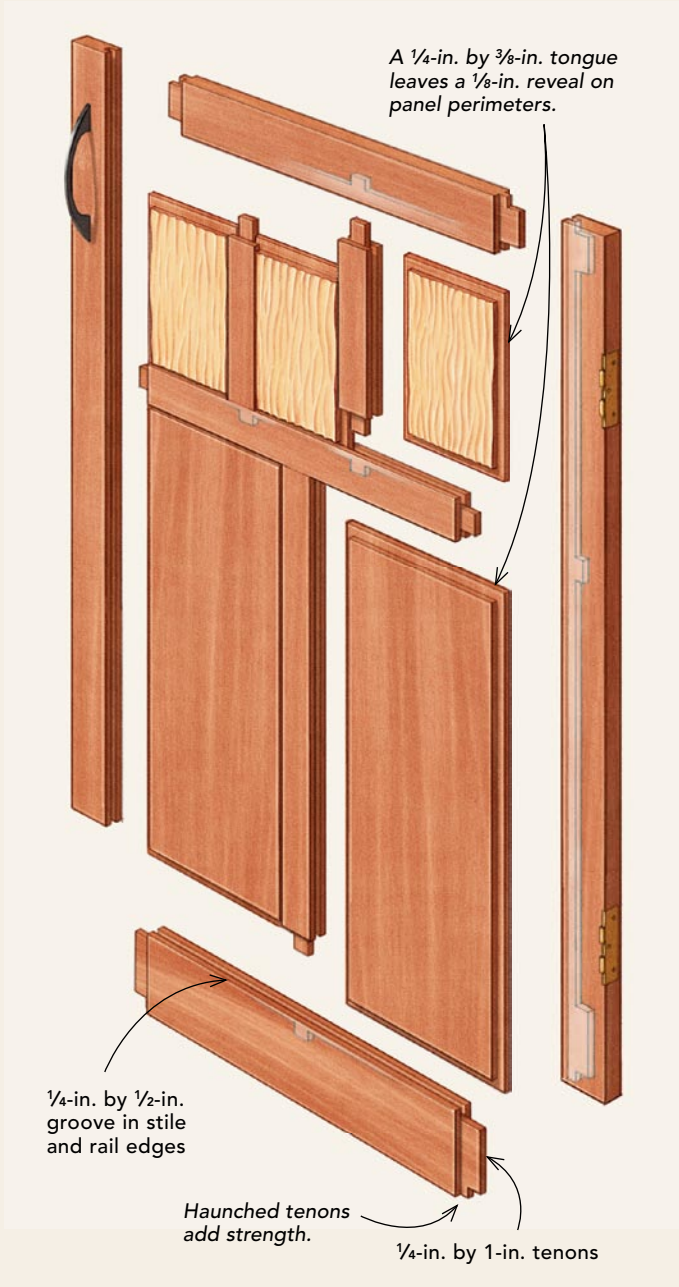

straightforward, assembled with #20 biscuits and 2-in. screws.

The only nonstandard detail is at the bottom of the bookcase, and it is something that normally would never be seen. Because this bookcase cantilevers into the stairwell, a strip of the finish wood several inches wide had to be let into the bottom of the case.

Before assembling the boxes, I cut the holes for shelf pins, and with help from my wife, Susan, painted all interior surfaces. Painter's tape kept biscuit slots free of paint.

With the cases clamped together temporarily, I took all the measurements I needed for the face frames. Then I pushed the cases out of the way and got to work on the face frames.

Add interest with small, textured, decorative panels

Like the carcase, the face frames were built in sections. To join the boxes, the front and back of the case got a 6-ft.-wide face frame in the center. Then each end got a smaller face frame, roughly 2 ft. wide on the ends.

Cutting mortises and tenons is an antiquated approach in the era of the Kreg pocket-hole jig, but the joinery is reliable and strong. The wood is utile, a West African hardwood often used as a substitute for South American mahogany. It has some attractive ribbon stripping, machines well, and sands and finishes nicely. It cost me about $5.50 per bd. ft.

To break up the monotony of all that utile on the section facing the stairwell, I introduced nine small panels, each about 6 in. square. I added texture to the face of each panel with the

Paint first, then assemble. *Prime and paint interior surfaces before assembly. Use painter's tape to keep paint from clogging biscuit slots. Also, cut or drill holes for adjustable shelving.*

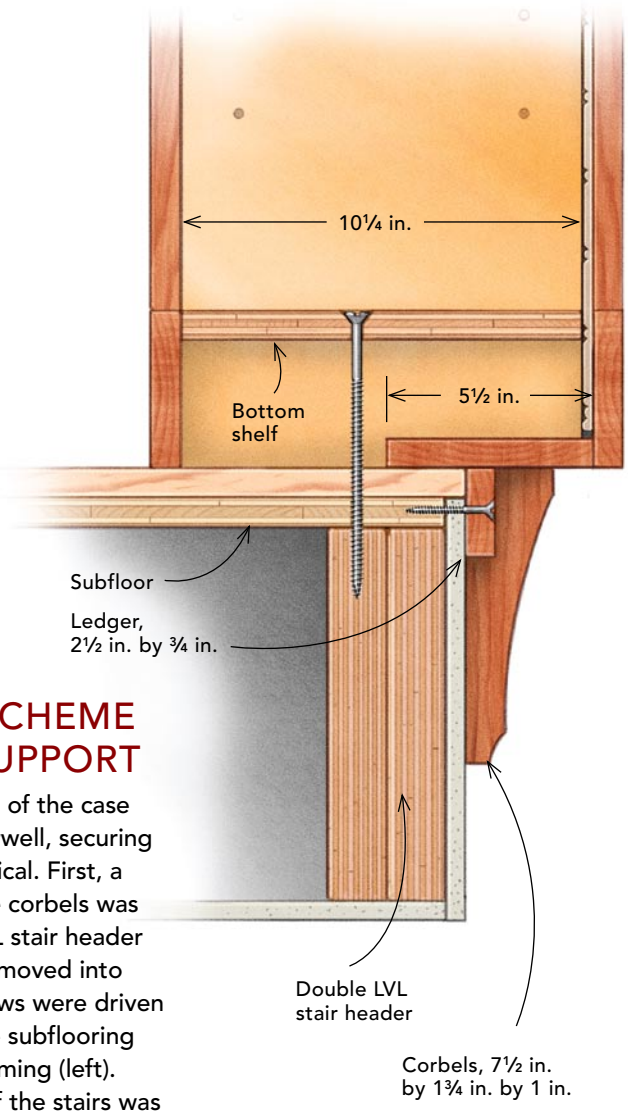

SPACE-SAVING SCHEME NEEDS EXTRA SUPPORT

Because a third of the width of the case is cantilevered over the stairwell, securing the cabinet in place was critical. First, a ledger supported by double corbels was screwed into the double LVL stair header (above). After the case was moved into position, 6-in. by 5/16-in. screws were driven through the cabinet into the subflooring and, where possible, the framing (left). The end opposite the top of the stairs was screwed into the wall framing as well.

tip of a ½-in. core-box router bit, painted the panels the same color as the cabinet interior, and sanded them lightly to let some of the wood show through. I used the same panels to dress up the doors on the office-facing side of the bookcase.

Before gluing up the paneled section facing the stairs, I finished any edges that would be inaccessible. After the section was glued up, I pinned the panels in place from the back side with small nail, one nail in the middle of each panel top and bottom. The pins let the panels move with changes in humidity but keep them centered.

Glue up is challenging

With the two big face-frame sections assembled and the rest of the parts and pieces milled, I was ready to give up the floor space in my shop and put the carcase together. I screwed together the two plywood boxes, tipped the case on its face, and attached the center piece of MDF beadboard with glue and nails. Then I rolled the case on its back and glued on the first frame.

In advance, I'd milled mortises in the stiles on each end of the center frame so that the other pieces could be added in sections: first the 6-ft.-wide center section, then the wings on each side. Building the case this way meant I didn't have to handle or machine any pieces of lumber much longer than 75 in.

When the case had a complete front face frame, I repeated the process on the back: first the preassembled frame-and-panel center section, then the two end frames and their panels. Then I sanded down everything and finished it with a wipe-on polyurethane finish.

I left the doors and top for later to reduce the weight of the case, and with some borrowed muscle, I moved the case out of the shop, into the house, and then up the stairs.

Add brackets, and install the case

With only one-third of the case cantilevered over the stairwell, most of the bookcase's weight is supported by the floor. But to prevent the case from tipping, I installed a ledger and five corbels. The 1-in.-thick, 7½-in.-long corbels are notched, glued, and screwed to the ledger. The ledger is screwed to the face of the stairwell opening.

The bookcase abuts a wall at the far end of the stairwell, and here, I ran screws through the end and then into the wall framing to anchor it. To set the rest of the bookcase, I ran long screws through the bottom of the case into the floor; then I plugged the counterbores and touched up the paint.

When the rest of the rail system for the stairs is installed, I'll tie the bookcase to the post at the top of the stairs. □

Contributing writer Scott Gibson builds furniture in his home shop in East Waterboro, Maine. Photos courtesy of the author.